# Technical data sheet

Product features

| Steak grill electric with digital timer and top contact plate 65x48 table 230/400 V / 1/3N | | |
|---|---|---|
| **Model** | **SAP Code** | 00021131 |
| FTHC 60 ED + KD 30 T | **A group of articles - web** | Grills and grill plates |



- Top type: Smooth
- Griddle dimensions [mm x mm]: 650 x 480 + 320 x 380
- Griddle thickness [mm]: 10.00
- Container for liquid fat: Yes
- Independent heating zones: Separate control for each heating zone on the bottom plate and for the top plates
- Maximum device temperature [°C]: 300
- Surface finish: durable chrome
- Removable rim: No

| | | | |
|---|---|---|---|
| **SAP Code** | 00021131 | **Power electric [kW]** | 9.000 |
| **Net Width [mm]** | 660 | **Loading** | 230/400 V / 1/3N - 50 Hz |
| **Net Depth [mm]** | 660 | **Griddle dimensions [mm x mm]** | 650 x 480 + 320 x 380 |
| **Net Height [mm]** | 400 | **Top type** | Smooth |
| **Net Weight [kg]** | 62.00 | | |



RM GASTRO, s.r.o.,
Třída Čs. armády 816,
391 81 Veselí nad Lužnicí 1, ID:49825062

# Technical data sheet

Technical drawing

| Steak grill electric with digital timer and top contact plate 65x48 table 230/400 V / 1/3N | | |
|---|---|---|
| **Model** | **SAP Code** | 00021131 |
| FTHC 60 ED + KD 30 T | **A group of articles - web** | Grills and grill plates |

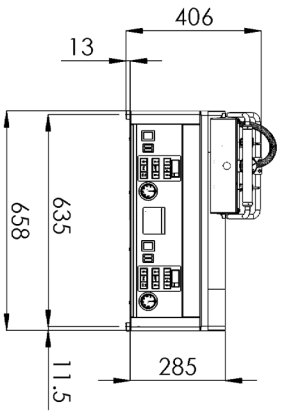


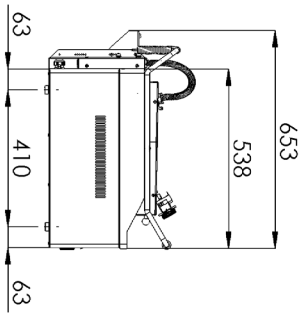


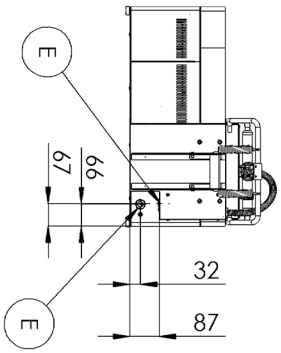




RM GASTRO, s.r.o.,
Třída Čs. armády 816,
391 81 Veselí nad Lužnicí 1, ID:49825062

# Technical data sheet

Technical parameters

**Steak grill electric with digital timer and top contact plate 65x48 table 230/400 V / 1/3N**

| Model | SAP Code | 00021131 |
|---|---|---|
| FTHC 60 ED + KD 30 T | A group of articles - web | Grills and grill plates |

1. **SAP Code:**
   00021131
2. **Net Width [mm]:**
   660
3. **Net Depth [mm]:**
   660
4. **Net Height [mm]:**
   400
5. **Net Weight [kg]:**
   62.00
6. **Gross Width [mm]:**
   710
7. **Gross depth [mm]:**
   725
8. **Gross Height [mm]:**
   540
9. **Gross Weight [kg]:**
   65.00
10. **Device type:**
    Electric unit
11. **Construction type of device:**
    Table top
12. **Power electric [kW]:**
    9.000
13. **Loading:**
    230/400 V / 1/3N - 50 Hz
14. **Protection of controls:**
    IPX4
15. **Exterior color of the device:**
    Stainless steel
16. **Material:**
    AISI 430
17. **Indicators:**
    operation and warm-up
18. **Surface finish:**
    durable chrome
19. **Maximum device temperature [°C]:**
    300
20. **Minimum device temperature [°C]:**
    50
21. **Griddle dimensions [mm x mm]:**
    650 x 480 + 320 x 380
22. **Griddle thickness [mm]:**
    10.00
23. **Container for liquid fat:**
    Yes
24. **Independent heating zones:**
    Separate control for each heating zone on the bottom plate and for the top plates
25. **Removable rim:**
    No
26. **Uniform heating:**
    Yes
27. **Top type:**
    Smooth
28. **Cross-section of conductors CU [mm²]:**
    4



RM GASTRO, s.r.o.,
Třída Čs. armády 816,
391 81 Veselí nad Lužnicí 1, ID:49825062